PNEUMATIC ACTUATOR · 0–90°

AT601U

Double acting & spring return pneumatic actuator

AT601U-DM

Quarter-turn pneumatic actuator for 0–90° valve automation, available double acting (D) or spring return with spring sets S 05 to S 12.

- Double acting or spring return (S 05 – S 12)
- ISO 5211 F14 standard flange
- Optional flanges: F10 + F12
- Air ports 2 and 4 · G1/4"
- ST, HT and LLT temperature versions

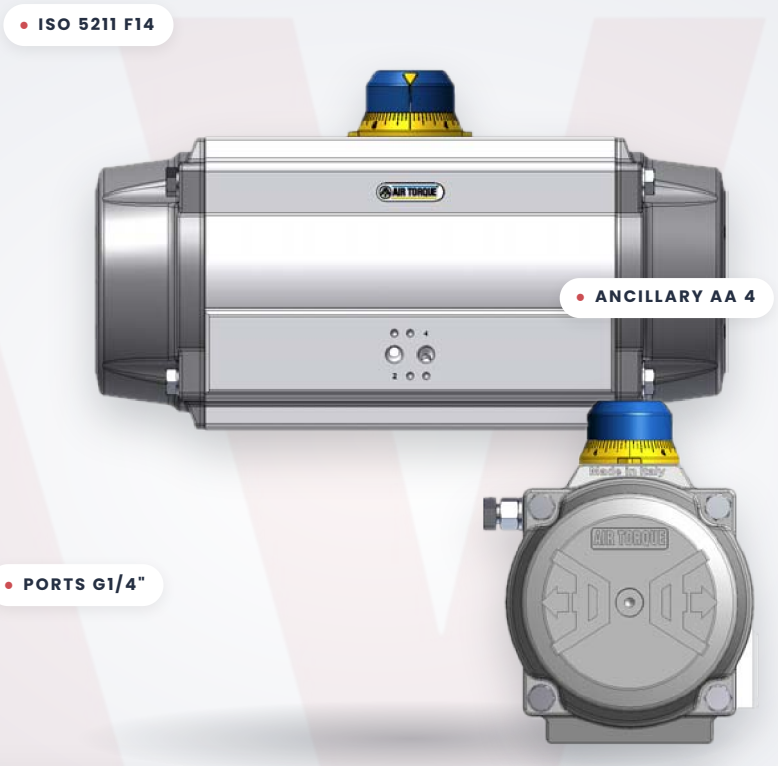

1702 Nm	8 bar	F14	34.3 kg
DA TORQUE @ 8 BAR	MAX. PRESSURE	STD ISO 5211 FLANGE	APPROX. WEIGHT (DA)

Double acting output torque.

NM · 0° AND 90°

Pressure (bar)	2.5	3	3.5	4	4.2	4.5	5	5.5	6	7	8
Torque (Nm)	**532**	**638**	**745**	**851**	**893**	**957**	**1064**	**1170**	**1276**	**1489**	**1702**

Stroke

Rotation & travel adjustment

Rotation (std)	**0° – 90°**
Max. stroke	**-5° to +95°**
Adjustable	**-5...+15° / +75...+95°**
Screw adjustment	**1° per 1/6 turn**

Air & timing

Chamber Ø 200 mm · max. 8 bar

Air volume (open/close)	**5.94 / 9.46 L**
Moving time D (open/close)	**2.7 / 3.2 s**
Moving time S (open/close)	**3.5 / 4.0 s**
Ancillary attachment	**AA 4**

Temperature

Operating range options (°C)

ST (standard)	**-40 to +80**
HT (high temp.)	**-15 to +150**
LLT (extreme low)	**-55 to +80**
Max. pressure	**8 bar**

SPRING RETURN SETS S 05 · S 06 · S 07 · S 08 · S 09 · S 10 · S 11 · S 12 — Full torque table overleaf

Moving times measured under the test conditions listed overleaf. Every temperature range option requires proper components and lubricant – see Air Torque technical data sheet T.D.S. U00501E.

SUPPLIED & SUPPORTED IN THE UK BY
Actuation Valve & Control Ltd
actuation.co.uk

DIMENSIONS & MOUNTING

AT601U D/S – 90° dimensions in mm.

ISO 5211 flange options, drive square details and spring return output torque for every spring set from S 05 to S 12.

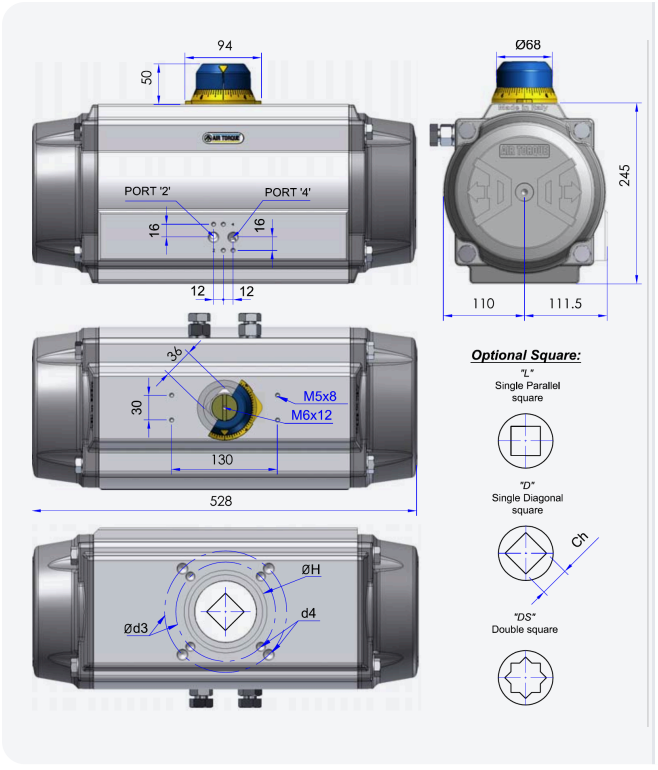

ISO 5211 FLANGE DIMENSIONS

	STANDARD	OPTIONAL	
ISO 5211	**F14**	**F10 + F12**	
Ø d2	100	NA	85
Ø d3	140	102	125
d4	M16x24	M10x15	M12x18
Ø H	100	85	
Ch x l min. D	22x40 - 36x38		
Ch x l min. DS	27x40 - 36x38		
h min.	2	2	2
h1	3	NA	1.5

Spigot (Ø d2 / h1): only on request. NA = not available.

CONNECTION / ATTACHMENT

Pressure connection: port 2 and 4	**G1/4"**
Ancillary attachment	**AA 4**

OPTIONAL SQUARE

"D" single diagonal square · **"L"** single parallel square · **"DS"** double square

Spring return output torque.

NM · START / END OF STROKE

Spring set	2.5 bar		3 bar		3.5 bar		4 bar		4.2 bar		4.5 bar		5 bar		5.5 bar		6 bar		7 bar		8 bar		Spring stroke		Approx. weight (kg)
	0°	90°	0°	90°	0°	90°	0°	90°	0°	90°	0°	90°	0°	90°	0°	90°	0°	90°	0°	90°	0°	90°	90°	0°	
	Start	End	Start	End	Start	End	Start	End	Start	End	Start	End	Start	End	Start	End	Start	End	Start	End	Start	End	Start	End	
S 05	319	217	426	323	532	430	638	536	681	578	745	642	851	749									**315**	**213**	**38.2**
S 06	277	154	383	260	489	367	596	473	638	515	702	579	808	686	915	792							**378**	**255**	**39**
S 07			341	197	447	304	553	410	596	453	660	516	766	623	872	729	979	835					**441**	**298**	**39.7**
S 08					404	241	511	347	553	390	617	453	723	560	830	666	936	772	1149	985			**504**	**340**	**40.5**
S 09							468	284	511	327	575	390	681	497	787	603	894	709	1106	922	1319	1135	**567**	**383**	**41.3**
S 10											532	327	638	434	745	540	851	646	1064	859	1277	1072	**630**	**425**	**42**
S 11													596	371	702	477	809	583	1021	796	1234	1009	**693**	**468**	**42.8**
S 12															660	414	766	520	979	733	1192	946	**756**	**510**	**43.6**

MOVING TIME TEST CONDITIONS

(1) Room temperature, (2) actuator stroke 90°, (3) solenoid valve with orifice of 11 mm and a flow capacity Qn 6000 L/min, (4) inside pipe diameter 11 mm, (5) medium clean air, (6) air supply pressure 5.5 bar (79.75 psi), (7) actuator without external resistance load. When one or more of these parameters differ in the field, the moving time will be different.

OPERATING MEDIUM

The operating medium must be free of dust and oil. Maximum particle size must not exceed 30 µm (ISO 8573 Part 1, Class 5). To prevent water condensation and/or solidification (ice when the actuator works below 0 °C), the operating medium must have a dew point of -20 °C or at least 10 °C below the ambient temperature (ISO 8573 Part 1, Class 3).

Data supplied by Air Torque and provided for reference only. Specifications may change without notice – please confirm details with Actuation Valve & Control before ordering.

Sizing an Air Torque actuator?
Talk to our UK team about torque sizing, mounting kits and complete actuated valve packages.
actuation.co.uk